MAIN SPECIFICATIONS

General	1	Manufacturer		UN									
	2	Model		FD45T	FD50T	FD55T	FGL45T	FGL50T	FGL55T	FL45T	FL50T	FL55T
	3	Power Type		Diesel			Gasoline & LPG			LPG		
	4	Rated Load Capacity	Q(kg)	4500	5000	5500	4500	5000	5500	4500	5000	5500
	5	Load Centre	C(mm)	500								
Characteristic & Dimension	6	Rated Lift Height	H3(mm)	3000								
	7	Free Lift Height	H2(mm)	150								
	8	Fork Size (LxWxT)	mm	1070x150x50		1070x150x55	1070x150x50		1070x150x55	1070x150x50		1070x150x55
	9	Mast Tilt Angle (F/R, α°/β°)	deg	6°/12°								
	10	Fork Overhang(Wheel Center to Fork Face)	X1(mm)	571		576	571		576	571		576
	11	Rear Overhang	X2(mm)	605		655	605		655	605		655
	12	Ground Clearance (Bottom of Mast)	H7(mm)	140								
	13	engith to Face of Fork (Without Fork)	L1(mm)	3265		3315	3265		3315	3265		3315
	14	Overall Width	B1(mm)	1520								
	15	Mast Lowered Height	H1(mm)	2250								
	16	Mast Extended Height(With Backrest)	H4(mm)	4250		4405	4250		4405	4250		4405
	17	Overhead Guard Height	H5(mm)	2370 (2260)								
	18	Turning Radius (Outside)	Wa(mm)	2930		2980	2930		2980	2930		2980
	19	Min.Aisle width for pallets	Ast(mm)	4690		4750	4690		4750	4690		4750
Performance	20	Travel Speed (Full Load/No Load)	km/h	25/26			25/26			25/26		
	21	Lifting Speed (Full Load/No Load)	mm/sec	580/620		530/580	580/620		530/580	580/620		530/580
	22	Lowering Speed(Full Load/No Load)	mm/sec	300-600								
	23	Max.Drawbar Pull(Full Load/No Load)	KN	41/25								
	24	Max.Gradeability(Full Load/No Load)	%	33/28								
Chassis	25	Tyre (Front x 2)	mm	300-15-18PR								
	26	Tyre (Rear x 2)	mm	7.00-12-12PR								
	27	Front Tread	B2(mm)	1232								
	28	Rear Tread	B3(mm)	1190								
	29	Wheelbase	Y(mm)	2100								
Weight	30	Total Weight	kg	6510	6920	7280	6510	6920	7280	6510	6920	7280
	31	Front Axle Weight Distribution (Full Load)	kg	9840	10540	11270	9840	10540	11270	9840	10540	11270
	32	Rear Axle Weight Distribution (Full Load)	49	1170	1370	1510	1170	1370	1510	1170	1370	1510
	33	Front Axle Weight Distribution (No Load)	kg	3080	3030	3010	3080	3030	3010	3080	3030	3010
	34	Rear Axle Weight Distribution (No Load)	kg	3430	3890	4270	3430	3890	4270	3430	3890	4270
Power & Transmission	35	Battery	V/Ah	24/90			12/90					
	36	Engine Model		S6S			WG3800-GL-C			WG3800-L-E5C (EPA/EU V) /WG3800-L-C		
	37	Engine Manufacturer		MITSUBISHI			Kubota			Kubota		
	38	Rated Output /r.p.m.	kw	52/2300			57.6(Gasoline) 60.7(LPG)/2400			59/2400		
	39	Rated Torque /r.p.m.	N.m	248/1700			248(Gasoline) 273(LPG)/1200			282/1200		
	40	No.of Cylinder		6			4			4		
	41	Bore x Stroke	mm	94x120			100x120			100x120		
	42	Displacement	L	4.996			3.768			3.768		
	43	Fuel Tank Capacity	L	110								
	44	Transmission Type		Hydraulic								
	45	Transmission Stage (FWD/RVS)		2/1								
	46	Operating Pressure (For Attachments)	Mpa	23.5								

ZHEJIANG UN FORKLIFT CO.,LTD.

ADDRESS: NO.1,ROAD ONE,XINDENG NEW DISTRICT,FUYANG, HANGZHOU,ZHEJIANG 311404,CHINA

TEL: +86-571-8688 8355 (AMERICA)
+86-571-8886 9363 (EUROPE)
+86-571-8688 8377 (ASIA, AFRICA, OCEANIA)

E-MAIL: info@unforklift.com

PARTS INQUIRY: parts@unforklift.com

www.unforklift.com

CE CERTIFICATE ISO14001 2004 ISO9001 2004

UN FORKLIFT

F SERIES FORKLIFT TRUCK

Capacity 4.5 ton-5.5 ton (Diesel / Gasoline / LPG)

F Series 4.5–5.5 ton internal combustion forklift is UN Forklift' s latest innovation, designed to deliver superior performance, durability, and operator comfort. Built for heavy-duty applications, this new model combines advanced engineering with a robust structure to handle demanding material handling tasks with ease.



HIGH PERFORMANCE

- Equipped Mitsubishi & Kubota engines, featuring low emissions, high performance and durability.
- Equipped with a high-speed ratio floating transmission to enhance driving speed and improve work efficiency.



- The dual-pump flow merging system enhances work efficiency and reduces energy loss.



- Multifunctional color display for real-time monitoring.



- New-generation high-efficiency,energy-saving integrated LED lighting system.



- Load sensing system enhances operational efficiency.
- The integrated large turning cast steering axle increases axle strength by 30%, ensuring greater durability and reducing the turning radius.



SUPERIOR ERGONOMICS

- The adjustable steering column equip with a small steering wheel for more effortless operation.
- The integrated wide-view mast provides a broader vision(Triplex Mast)

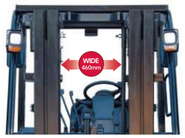

- The steering axle features rubber damping to absorb impacts and improve ride smoothness.
- Four shock-absorbing mounts are used to reduce overall vehicle vibration and enhance driving comfort.
- Enlarged operation space.
- The ratchet type handbrake, effectively reducing operating force.
- Suspended pedal-type braking system achieves smooth braking and reduce vibrations.



- Equipped with an armrest box featuring a document holder.

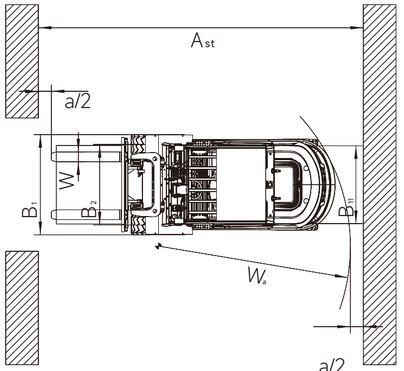

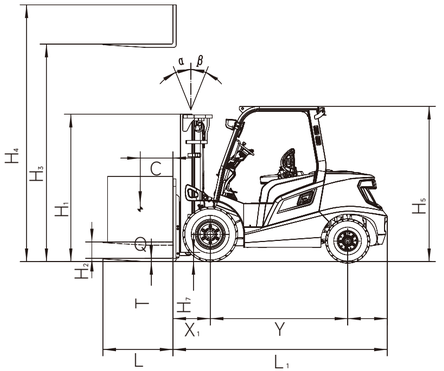

Load Curve

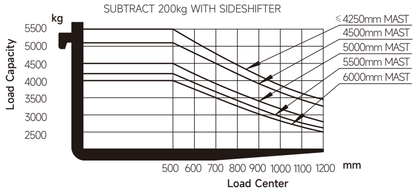

MAST SPECIFICATIONS & RATED CAPACITIES

Mast Type	Mast Name	Max. Fork Height (mm)	Load capacity (kg)			Overall Height (mm)						Free Lift (mm)				Tilt Angle	Total weight(kg)		
						Lowered		Extended				Without Backrest		With Backrest					
								Without Backrest		With Backrest									
			4.5t	5.0t	5.5t	4.5-5.0t	5.5t	4.5-5.0t	5.5t	4.5-5.0t	5.5t	4.5-5.0t	5.5t	4.5-5.0t	5.5t		4.5t	5.0t	5.5t
Wide View Mast	RM250	2500	4500	5000	5500	1990		3392		3758		130	135	130	135	6/12	6450	6860	7220
	RM300	3000	4500	5000	5500	2240		3892		4258		130	135	130	135	6/12	6510	6920	7280
	RM330	3300	4500	5000	5500	2390		4192		4558		130	135	130	135	6/12	6545	6955	7315
	RM350	3500	4500	5000	5500	2490		4392		4758		130	135	130	135	6/12	6570	6980	7340
	RM370	3700	4500	5000	5500	2590		4592		4958		130	135	130	135	6/12	6590	7000	7360
	RM400	4000	4500	5000	5500	2790		4892		5258		130	135	130	135	6/12	6720	7130	7490
	RM425	4250	4500	5000	5500	2915		5142		5508		130	135	130	135	6/6	6745	7155	7515
	RM450	4500	4300 *4500	4700 *5000	5200 *5500	3040		5392		5758		130	135	130	135	6/6	6775	7185	7545
	RM475	4750	4200 *4500	4700 *5000	5000 *5500	3165		5642		6008		130	135	130	135	6/6	6805	7215	7575
	RM500	5000	4000 *4200	4250 *4600	4500 *5000	3290		5892		6258		130	135	130	135	6/6	6835	7245	7605
	RM550	5500	3400 *4000	4000 *4200	4200 *4500	3590		6392		6758		130	135	130	135	6/6	6985	7395	7755
	RM600	6000	*3600	*3800	*4000	3840		6892		7258		130	135	130	135	6/6	7045	7455	7815
3-Stage Full Free Wide View Mast	TFM400	4000	4350 *4500	4800 *5000	5300 *5500	2080	2130	4892	4941	5258	5423	1268	1279	1268	1279	6/6	6740	7150	7510
	TFM435	4350	4350 *4500	4800 *5000	5300 *5500	2190	2240	5242	5291	5608	5773	1378	1389	1378	1389	6/6	6770	7180	7540
	TFM450	4500	4350 *4500	4800 *5000	5300 *5500	2240	2290	5392	5441	5758	5923	1428	1439	1428	1439	6/6	6785	7195	7555
	TFM470	4700	4000 *4200	4500 *4800	5000 *4800	2305	2355	5592	5641	5958	6123	1493	1504	1493	1504	6/6	6810	7220	7580
	TFM500	5000	3800 *4000	4200 *4500	4500 *4800	2440	2490	5892	5941	6258	6423	1628	1639	1628	1639	6/6	6850	7260	7620
	TFM540	5400	3400 *3700	3800 *4200	4200 *4500	2590	2640	6292	6341	6658	6823	1778	1789	1778	1789	6/6	6900	7310	7670
	TFM600	6000	*3400	*3800	*4000	2790	2840	6892	6941	7258	7423	1978	1989	1978	1989	6/6	7040	7450	7810

(Asterisk)is for double front wheels model.

SAFETY & RELIABILITY

- The stamped OHG offers increased durability and reliability.
- All key connectors and joints are waterproof.
- The OPS (optional) system effectively prevents unintended forklift startup.





EASY MAINTENANCE

- 80° engine hood opening angle.
- Pin-mounted front and rear floor plates.
- The rear counterweight cover provides easy access for radiator maintenance.
- Detachable left and right side panels.